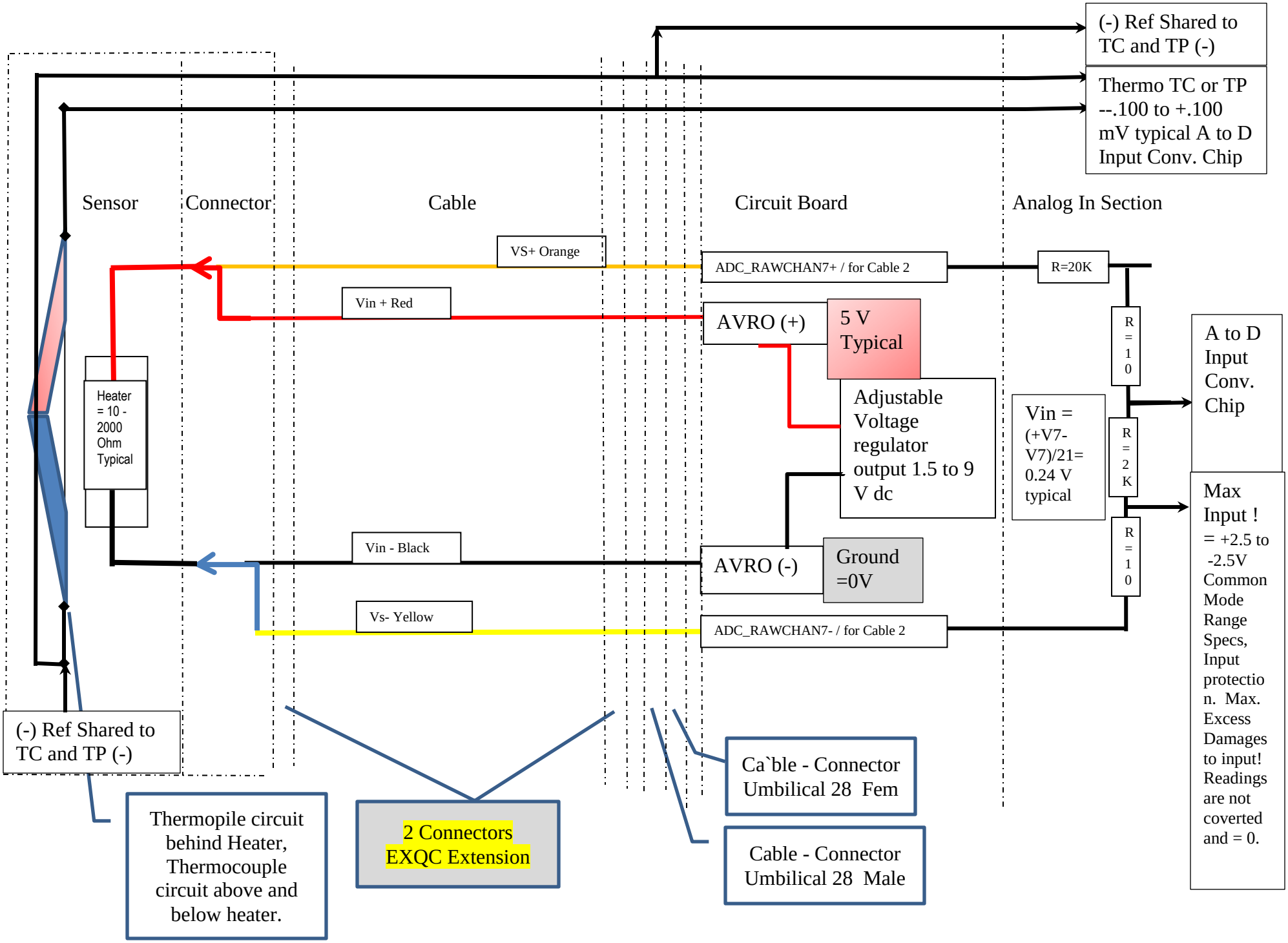
(-) Ref Shared to TC and TP (-)
Thermo TC or TP --.100 to +.100 mV typical A to D Input Conv. Chip
Sensor
Connector
Cable
Circuit Board
Analog In Section
VS+ Orange
ADC_RAWCHAN7+ / for Cable 2
R=20K
Vin + Red
AVRO (+)
5 V Typical
R = 10
A to D Input Conv. Chip
Heater = 10 - 2000 Ohm Typical
Adjustable Voltage regulator output 1.5 to 9 V dc
Vin = (+V7-V7)/21= 0.24 V typical
R = 2K
Max Input ! = +2.5 to -2.5V Common Mode Range Specs, Input protection. Max. Excess Damages to input! Readings are not coverted and = 0.
Vin - Black
AVRO (-)
Ground =0V
R = 10
Vs- Yellow
ADC_RAWCHAN7- / for Cable 2
(-) Ref Shared to TC and TP (-)
Thermopile circuit behind Heater, Thermocouple circuit above and below heater.
2 Connectors EXQC Extension
Ca`ble - Connector Umbilical 28 Fem
Cable - Connector Umbilical 28 Male